SIEMENS

RDH100

1

2

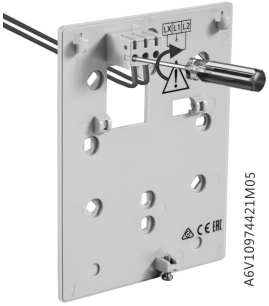

3

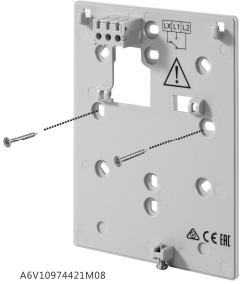

4

5

6

SIEMENS

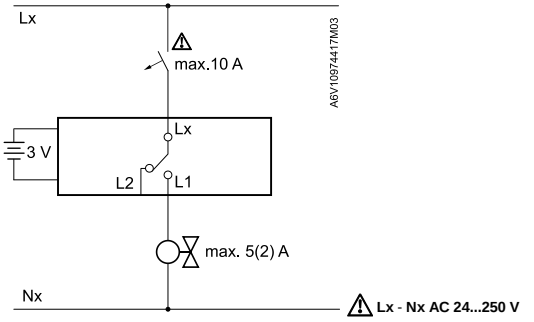
Lx
max.10 A
A6V10974417M03
Lx
3 V
L2
L1
max. 5(2) A
Nx
Lx - Nx AC 24...250 V

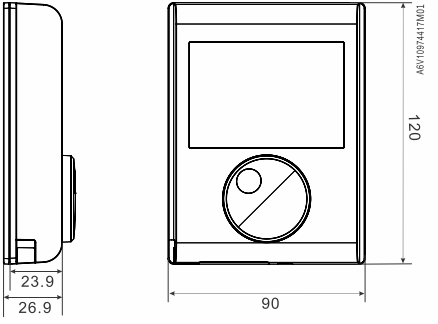
A6V10974417M01
120
23.9
26.9
90

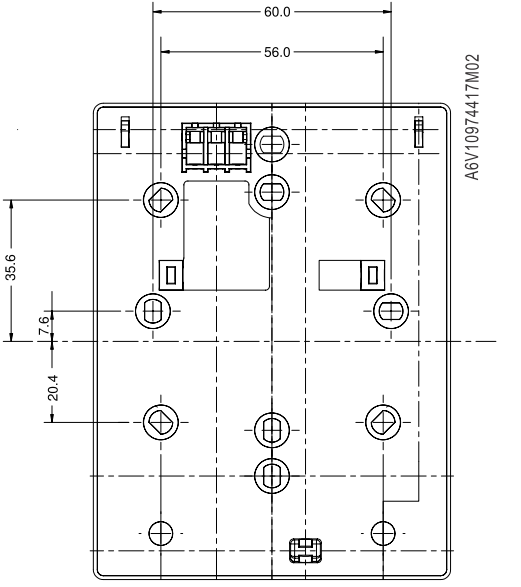
60.0
56.0
A6V10974417M02
35.6
7.6
20.4

[MM]